FULTON KITCHEN FAUCET

3825

- MAX COUNTER THICKNESS 2-3/8"
- MINIMUM INSTALL HOLE SIZE 1-1/2"

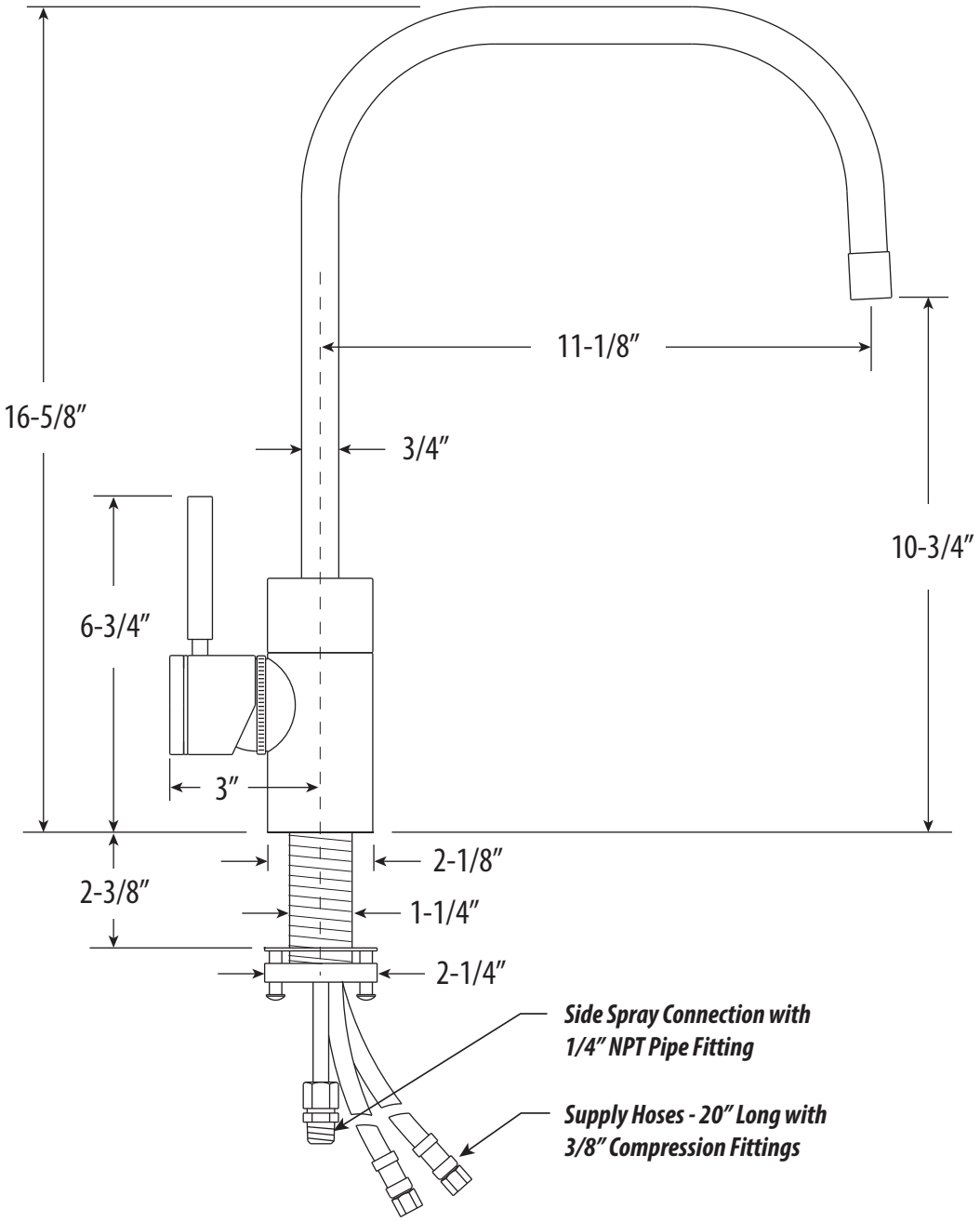

DIMENSIONS MAY VARY AND ARE SUBJECT TO CHANGE. NO RESPONSIBILITY IS ASSUMED FOR USE OF SUPERCEDED OR VOIDED DATA